APPENDIX 1

London Borough of Southwark

Ledbury Estate Tower Blocks

Pilot investigation and strengthening study

Issue 1 | 24 October 2019

This report takes into account the particular instructions and requirements of our client.

It is not intended for and should not be relied upon by any third party and no responsibility is undertaken to any third party.

Job number 245112-05

Ove Arup & Partners Ltd
13 Fitzroy Street
London
W1T 4BQ
United Kingdom
www.arup.com

ARUP

Contents

1 Introduction

1.1 Background

The Arup report 'Ledbury Estate: Structural Assessment of Bromyard, Peterchurch, Sarnsfield and Skenfrith House' dated 24th November 2017 noted that the four tower blocks on the Ledbury Estate did not comply with the Ministry of Housing and Local Government Circular 62/68 published 15th November 1968 and the 2012 BRE/DCLG Handbook for the assessment of Large Panel Systems (DCLG – Department of Communities and Local Government). Following this, Arup has been appointed to carry out further intrusive investigations to fully understand the existing construction and to develop a strengthening scheme. This report describes the findings to date of the ongoing investigations and outlines the proposed strengthening scheme.

1.2 Description of the original structural design of the buildings

Blocks on the Ledbury Estate were constructed using the Taylor Woodrow Anglian (TWA) large panel precast system (i.e. they were built from precast concrete panels that were assembled together on site). Each block consists of two residential towers and a lift/stair core in-between the two towers which provides access to the towers. It is likely that each of these three structures was designed to resist wind loading independently.

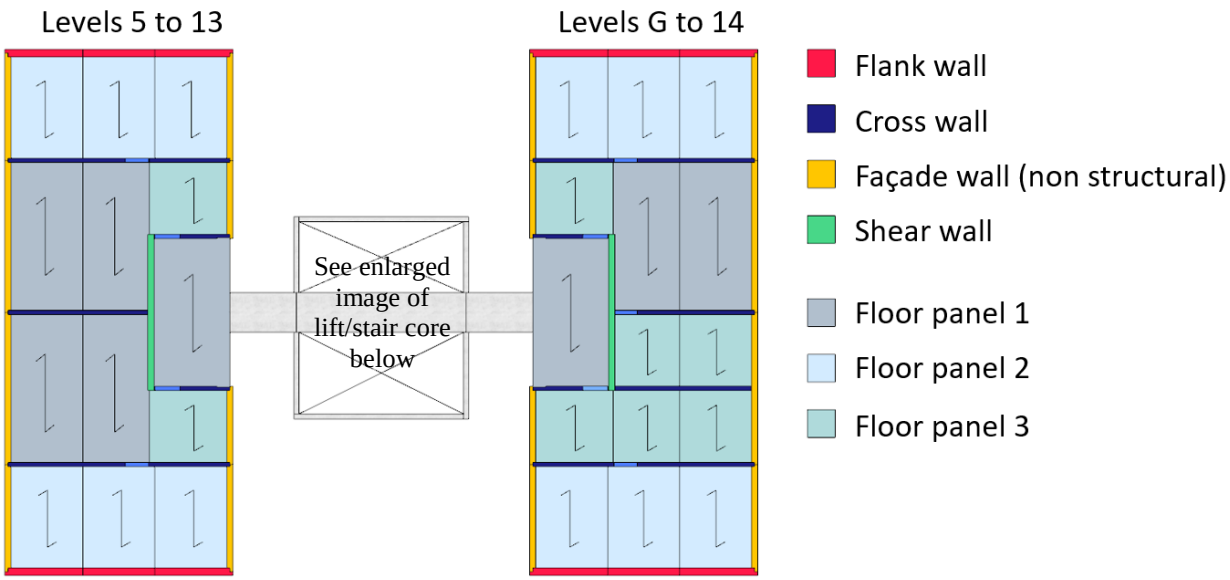

The residential towers are constructed with one-way spanning floors that span between cross walls and flank walls. On the long faces the façade panels are non-structural. Lateral stability against wind loading on the broad face is provided by the cross and flank walls. Lateral stability against wind loading on the narrow face is provided by the single shear wall.

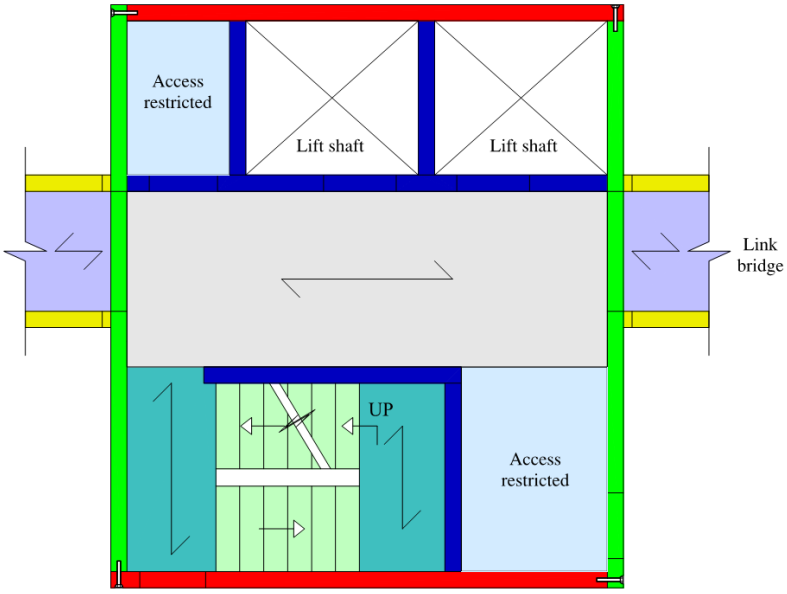

The stair core tower is constructed from four outer walls that have bolted connections in each corner and a reinforced coupling beam above the link bridges (the bridges that connect to the residential towers). The main floor panel spans towards the residential towers and the connecting link bridges. The stair landings are oriented 90° to the main floor panel and are supported on 'ledges' which project from the wall panels. Due to the floor panel orientation and the support conditions, all the outer wall panels (shown in red and green) and also the two inner walls around the stair (shown in blue) are considered structural. Lateral stability against wind loading is provided by the box geometry of the outer wall panels.

1.3 Requirement to check the resistance of the buildings to both disproportionate collapse and wind loading

A building which is susceptible to disproportionate collapse is one where the effects of accidents and situations where damage to small areas of a structure or failure of single elements could lead to collapse of major parts of the structure. In addition to checking the tower blocks for disproportionate collapse, the Ministry of Housing and Local Government Circular 62/68 requested a wind resistance check, suggesting that the wind codes at the time were out of date.

After comparing with modern codes, the actual wind loads are significantly higher than the blocks were originally designed for. This report therefore includes strengthening measures to the foundations for wind loading as well as to the superstructure for disproportionate collapse.

1.4 Overall purpose of this pilot stage

In summary the purpose of this pilot stage is to:

- To carry out intrusive investigations of the superstructure of one of the residential blocks (Bromyard House) to confirm details from previous limited intrusive investigations;
- To carry out intrusive investigations of the lift/stair core and foundations of Bromyard House; such investigations were not possible previously while the building was still occupied;
- To develop an approximate scheme design of proposed strengthening measures for both disproportionate collapse and wind, for costing purposes.

Since Bromyard House has now been vacated, the investigations described in Section 2 have been carried out in Bromyard House. As a result, the pilot strengthening scheme has been developed for Bromyard House but due to the similarity of the blocks, it is assumed that the cost of strengthening schemes for the other three blocks would be similar.

Arup is not appointed to assess the structure in the event of a fire or to assess the fire safety strategy of the buildings.

2 Pilot investigations

2.1 Residential tower investigations

The following tests and intrusive investigations have been carried out in 13 flats at various levels of Bromyard house:

- Intrusive investigations to confirm the connection details between the panels;
- 42 concrete cores were taken from the structural panels (10 each from floor panels, shear wall panels and flank wall panels and 12 from cross wall panels). Compressive strength and 'petrographic' tests were undertaken on the cores;
- Carbonation tests to check the risk of future corrosion of the steel reinforcement in the panels.

2.1.1 Condition

Given the age of the building, both the concrete and steel reinforcement was found to be in good condition

Concrete slowly 'carbonates' with time and once the depth of carbonation reaches the embedded steel reinforcement, it is at a greater risk of corrosion where sufficient moisture is present. Carbonation tests showed that the depth of carbonation was typically found to be only 5-25% of the depth of concrete covering the reinforcement. This means that the reinforcement is only at low risk of corrosion.

2.1.2 Panels

Flank wall panels

The flank wall panels were confirmed to be made of 2 leaves - a 165mm thick inner leaf and 80 mm non-structural outer leaf. The structural inner leaf was found to have a grid of 6mm smooth round steel reinforcement at 150 mm horizontal and vertical centres. A polystyrene filling was found in between the inner and outer leaves of the panel.

Cross wall panels

The cross walls were confirmed to be 150 mm thick. Intrusive investigations and scanning showed that there was no reinforcement mesh in the cross walls.

Shear wall panels

The shear wall panels were confirmed to be 230 mm thick with steel reinforcement as shown below:

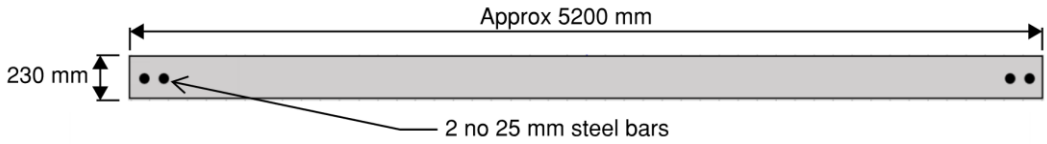

Floor panels

Typical floors investigated were found to be 180 mm deep hollow core planks with a 40-50 mm screed. The hollows in typical floor panels were 110 mm diameter and had a spacing of approximately 150 mm. The panels had bottom reinforcement of 10 mm bars at 150 mm centres as shown below:

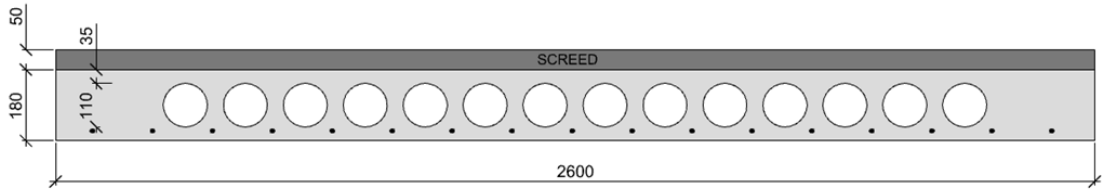

The voids in the kitchen panel were irregularly spaced and did not seem to follow any pattern.

In general, the concrete covering the bottom reinforcement was found to be quite variable ranging from 10 to 32 mm.

Façade panels

The façade panels were found to have a 100 mm inner leaf and an 80 mm outer leaf. A polystyrene filling was found between the inner and outer leaves.

2.1.3 Panel connection details

Flank wall/floor/flank wall connection

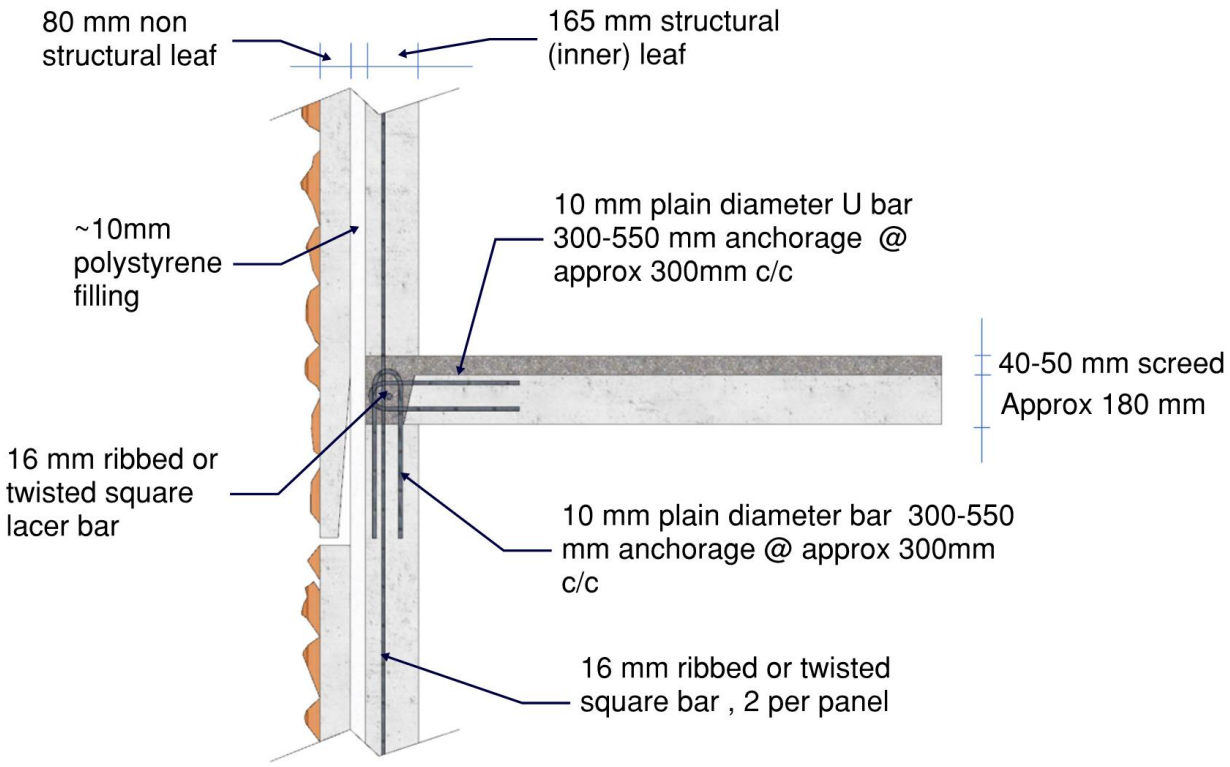

Flank wall to flank wall connection

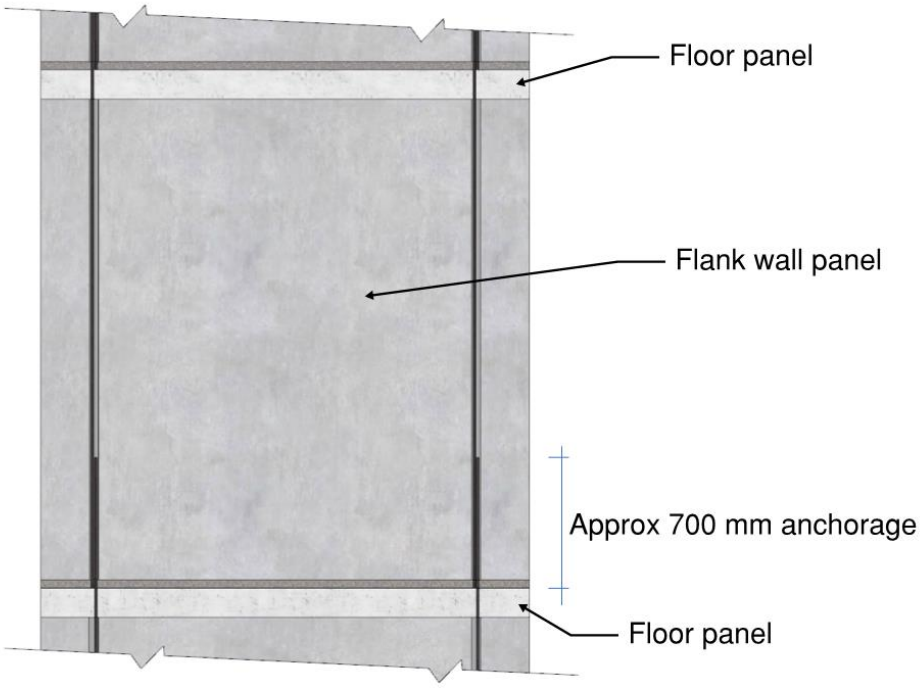

Cross wall/floor/Cross wall connection

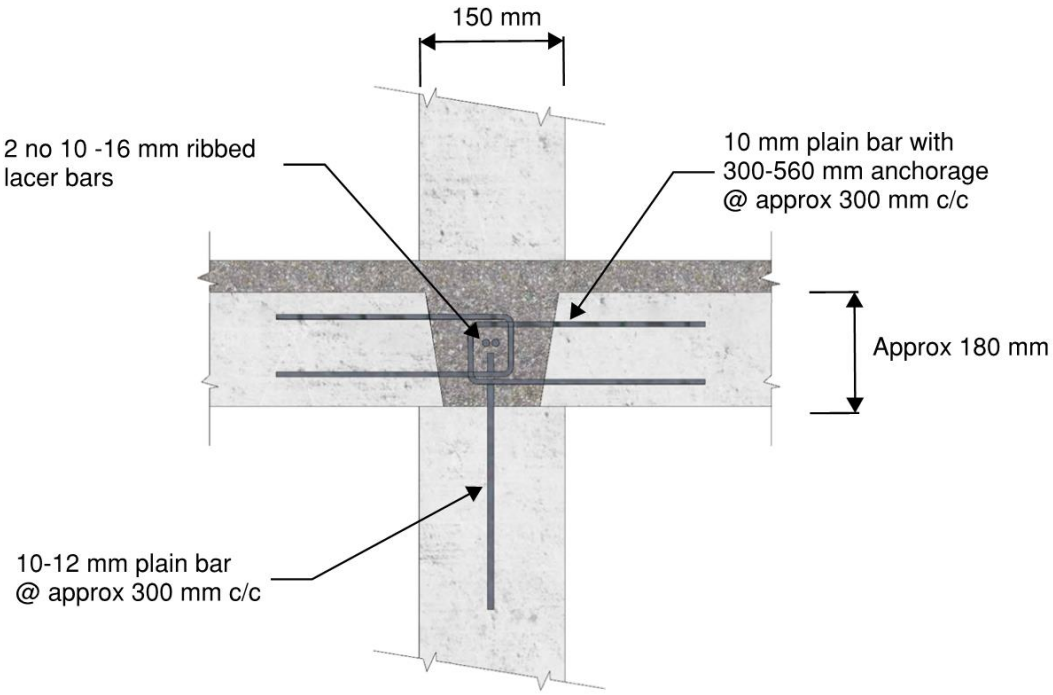

Shear wall/shear wall vertical connection

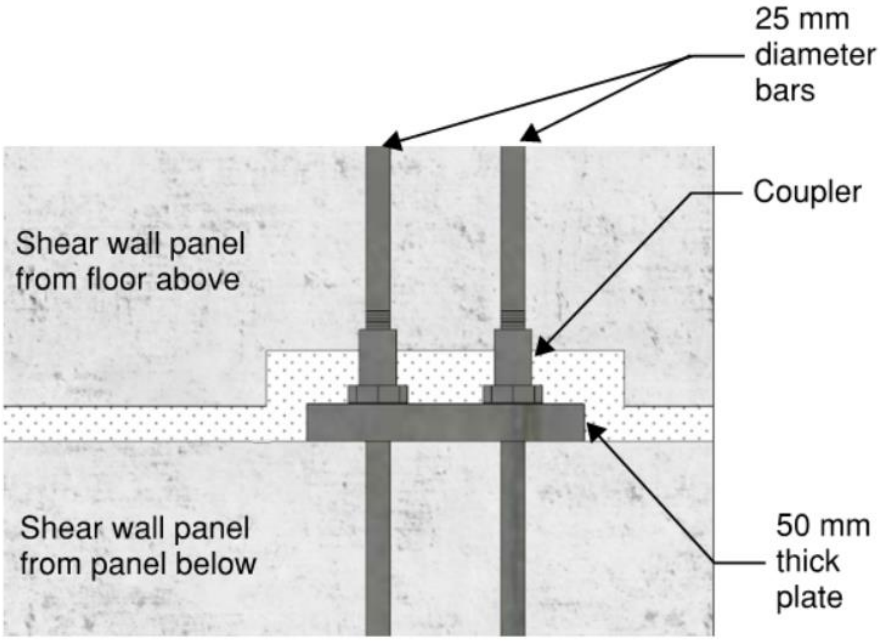

The connections in Large Panel Systems are known to be vulnerable to the quality of the site workmanship. Evidence of poor site workmanship was found during the investigations with sand instead of grout found in one of the wall to wall connections.

2.2 Stair core investigations

The following investigations have been carried out on the ground floor and levels 7 to 13 of the stair core structure:

- Visual inspection, aiming to identify locations of potential underlying structural issues and the state of materials;
- 'Ferro-scan' (specialist radar detection) investigation, aiming to confirm reinforcement distribution within concrete panels;
- Limited intrusive investigations to confirm bolted connections between panels;
- 10 concrete cores from the wall panels to test for compressive strength.

The investigations focused on the structural panels and the connections between them.

While there was not time to undertake full investigations of the stair core, sufficient information was obtained to assess the degree of works required for costing purposes.

2.2.1 Condition

The stair core panels and embedded reinforcing bars and connections, were found to be in good condition based on visual inspection. Carbonation testing was not considered necessary as the results from the residential towers showed low carbonation depths, as discussed in Section 2.1.1.

2.2.2 Panels

Outer wall panels

Ferro-scans of the outer wall panels indicate that they are only reinforced around the connections to other panels. Some reinforcement was detected at the edge of the panels and was confirmed through intrusive investigations around the bolted connections; details are discussed in Section 2.2.3.

Floor panels

Ferro-scans of the floor panels in the lift corridor showed similar reinforcement distributions as the floor panels investigated in the residential towers. It is therefore assumed that the floor panels are similar to those described in Section 2.1.2 with longitudinal reinforcement at 150 mm centres. This also indicates that the central panel spans onto the outer walls as opposed to the inner walls.

2.2.3 Panel connection details

Wall/floor/wall connection

The connections between the floor and wall panels were not investigated. These are assumed to be similar to those in the residential towers, as described in Section 2.1.3. The details of this connection would not change the conclusions of the assessment.

Stair to wall connection

The stairs are supported at each landing by spanning onto ledges in the wall panels known as corbels. These are shown in the photo below. There is a horizontal gap between the stairs and the wall panels along the side of the stairs. It is therefore assumed that the stairs do not provide any lateral restraint to the wall panels.

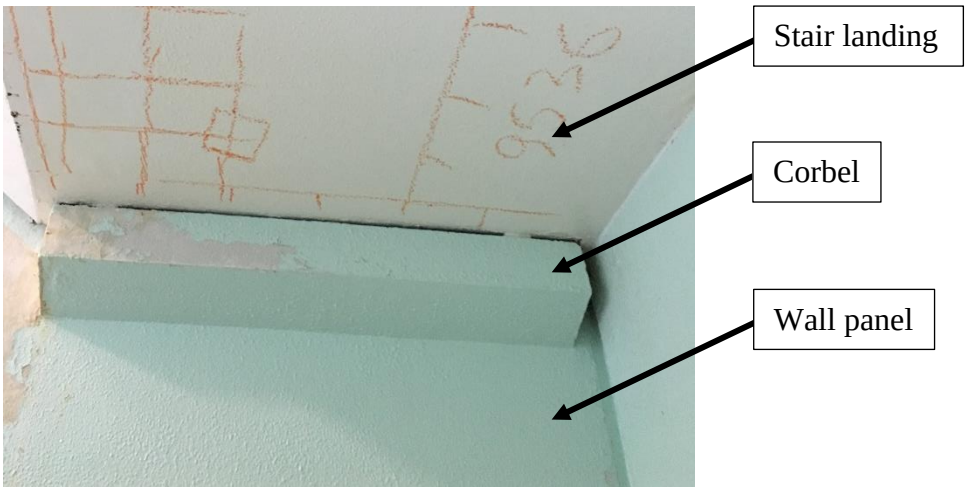

Outer wall/ outer wall corner connection

The outer wall panels are connected at the corners by stainless steel bolts. The diameter of the bolts was confirmed as 34 mm. The anchorage of the bolts in the connecting wall has been confirmed through intrusive investigation in three locations. The anchorage length was found to be 120 mm and a vertical reinforcing bar was found to be welded to the bar as show in the photograph below. There are four bolts up the height of each panel.

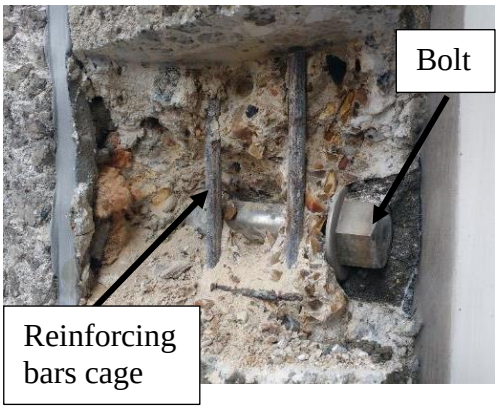

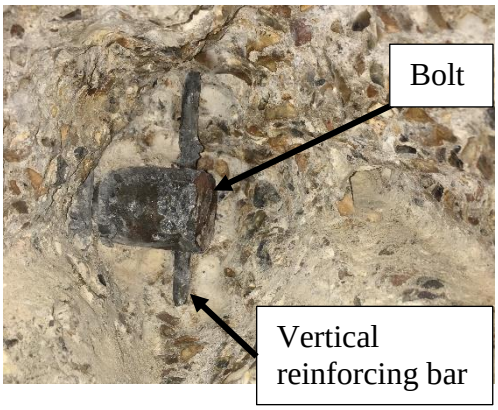

Coupling beam connection

The outer walls on each side of the stair core are connected over the opening for the link bridges by the coupling beam shown in the photograph below. Ferro scans of the beams showed that they were reinforced but they did not confirm the connecting detail. These connections were not investigated intrusively as it could not be done safely as it provides the gravity load path for the floor slab.

2.3 Foundation investigations

No structural drawings of the foundation were available so we conducted intrusive investigations. A trial pit was dug to the base of the foundation from outside one of the residential towers, and a set of vertical cores were taken inside the residential tower.

From the above mentioned investigations, it was determined that the building is on a raft foundation approximately 1m thick founded approximately 3.8 m below ground level.

No investigations were carried out for the foundations of the stair core due to lack of time, but it is assumed at this stage that these are likely to be similar for costing purposes.

3 Assessment

Resistance to disproportionate collapse

The investigations carried out during this phase confirms the findings reported in Arup's 2017 report (referred to in 1.1) that the blocks at the Ledbury Estate do not comply with the requirements for resistance against disproportionate collapse stipulated in the 2012 BRE/DCLG Handbook for the assessment of Large Panel Systems. The resistance of the stair core to disproportionate collapse is further discussed in Section 6.1.1.

Resistance to gravity loads

It was also found that the hollowcore floor panels do not fully comply with the gravity loading requirements in the current UK concrete code.

Resistance to wind

Whilst the recent investigations confirm that there is a raft foundation and confirm the size of the foundation, it was not possible to safely undertake sufficient investigations to ascertain the steel reinforcement arrangement in the raft. It proved equally difficult to estimate whether the vertical steel tension bars in the main shear wall were adequately anchored into the raft foundation.

The residential blocks have only one shear wall to resist wind on the narrow face:

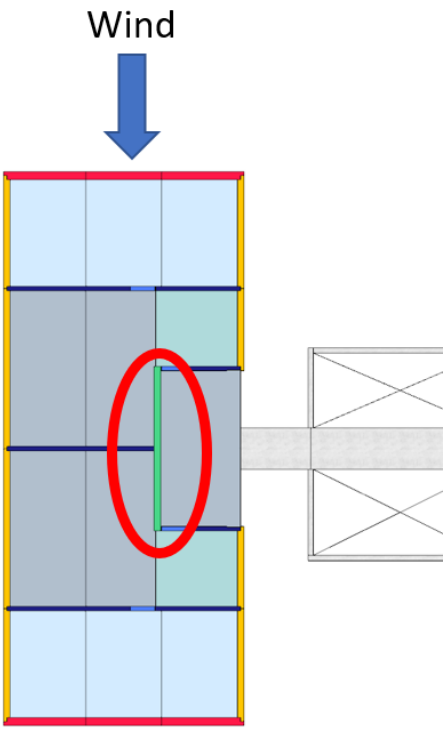

Since this wall is very lightly reinforced (as shown in Section 2.1.2) it is susceptible to "second order" effects. Calculations show that this shear wall is just strong enough to resist modern wind loads.

Whilst the superstructure is adequate for modern wind loading, the anchorage of the shear walls into the raft foundation was uncertain since very little information about the foundation is known. As a result, it has not been possible to confirm the foundation's ability to resist the wind "overturning" forces at the base of the shear wall.

4 Methods of achieving resistance to disproportionate collapse

4.1 Requirements in the current Building Regulations

The 2012 BRE/DCLG Handbook for the assessment of Large Panel Systems refers to the Building Regulations. The Regulations categorise these buildings to be consequence class 2B and deem them to be sufficiently designed against disproportionate collapse if **any one** of the following criteria are met:

1. Adequate horizontal and vertical tying between elements;
2. Demonstration that upon notional removal of any nominal length of load-bearing wall (one at a time in each storey of the building) the building remains stable and that the area of floor at any storey at risk of collapse does not exceed 15% of the floor area of that storey or 100 m^2 whichever is smaller and does not extend further than the immediately adjacent storeys.
3. Where notional removal of a loadbearing wall results in damage greater than the limit set out in 2, design that element as a key element (Approved document A of the Building Regulations states that key elements should be designed to withstand 34 kPa. However, the 2012 BRE/DCLG Handbook states that for buildings without a basement and without piped gas the design pressure for key elements can be reduced to 17 kPa).

4.2 Purpose of the Regulations and sources of gas explosions at Ledbury

The Regulations are intended to guard against disproportionate collapse in unknown accidental events (such as a gas explosion). Whilst the piped gas at Ledbury Estate has been turned off, there is still the risk of bottled gas explosions due to residents bringing in oxygen cylinders, camping stoves etc. As noted in the 2012 BRE/DCLG Handbook, this could cause a blast load of 17 kPa.

In addition, potential blast loads from nearby sources (such as the proposed new gas boiler house to provide common heating to the blocks) has also been assessed. The blast load from explosions from nearby sources have been has been estimated to be below 17 kPa.

4.3 Technical commentary on the current Building Regulations as they apply to Ledbury

4.3.1 Tying

The tying requirements discussed in 4.1(1) above assume that following the failure of a wall, the floors above are able to develop "catenary" (rope) action and maintain vertical stability as shown below.

This assumes that the floors above the failed wall are able to form hinges that allow for the large rotations required for catenary action.

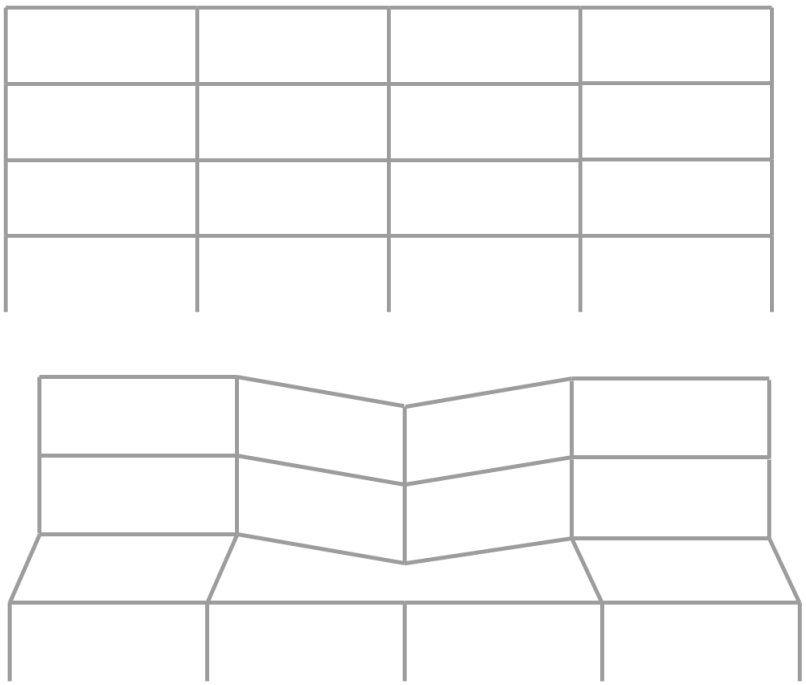

From the diagram below it is clear that the tie force in the floor must be proportional to the force P that the floor must support and inversely proportional to the angle of rotation α. Despite this current Building Regulations only specify the required tie forces with no reference to the "ductility" needed to allow the large rotation α. To achieve the tie forces specified in the Regulations the connections in a building like those at Ledbury would have to be able to accommodate rotations of approximately 30 degrees.

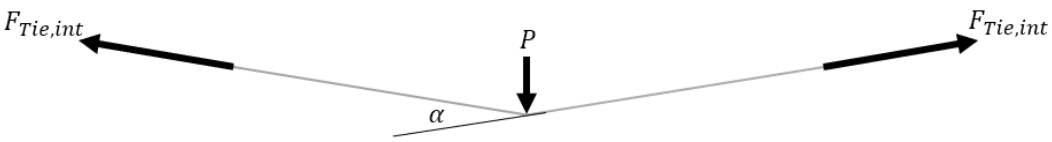

The current UK Concrete Code EN1992-1-1 states that the allowable rotation of concrete elements is approximately 3 degrees which is much lower than the 30 degrees discussed above; The floors at Ledbury are likely to be able to accommodate even less rotation than 3 degrees due to the lack of shear reinforcement in the floor panels.

Further sources such as 'Blast effects on buildings' by *Cormie et al* (DCLG, 2011) suggests that the maximum possible rotation achievable in concrete elements provided they have adequate shear reinforcement to prevent 'bursting' of the steel reinforcement through the concrete is 4 degrees.

In addition, tying action following the loss of one wall would pull in the adjacent walls as shown below. This would put large additional ("P-delta") forces into the walls, which again the walls at Ledbury would not be able to accommodate.

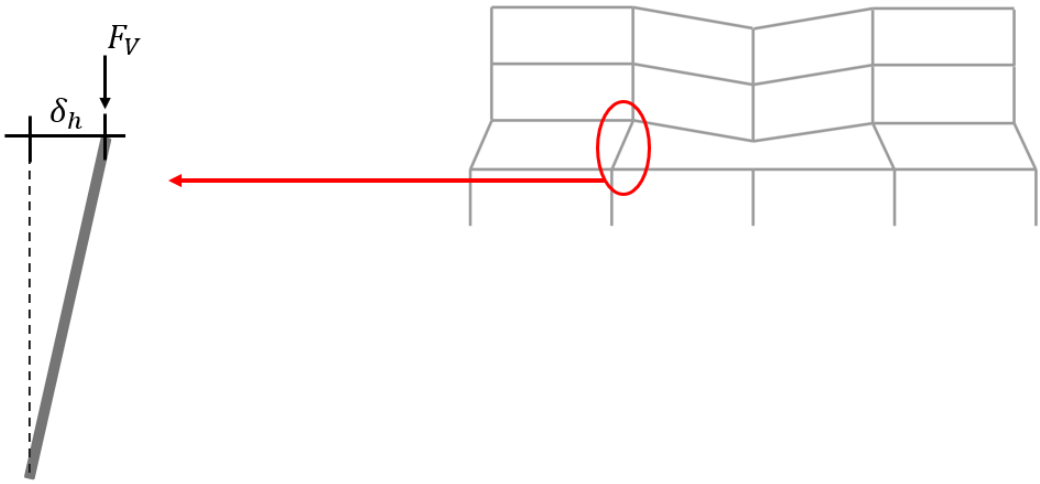

Further, the loss of one wall (in the manner shown above) would shed more load onto the adjacent walls. These loads would be further amplified due to the dynamic nature of a sudden wall loss due to an accidental event such as a gas explosion. The connections and elements at Ledbury Estate would not be able to accommodate these large forces.

For the reasons discussed above, tying would not in practice improve the resistance of Ledbury Estate against disproportionate collapse, and therefore it is not recommended to strengthen the buildings by this method, even though this would be sufficient to comply with the current Regulations.

4.3.2 Notional element removal

The notional element removal method discussed in 4.1(2) does also not account for the dynamic effects of sudden element removal during an accidental event.

4.4 Recommended options for Ledbury

Given the facts stated in the above section, only the key element method and notional element removal method, along with the inclusion of dynamic factor of 2

to account for sudden element removal can be considered to genuinely increase the resistance against disproportionate collapse.

5 Proposed strengthening scheme for the residential towers

5.1 Reasoning behind the proposed strengthening measures

5.1.1 Resistance against disproportionate collapse

Cross and Flank walls

For typical cross and flank walls on the lower floors arching calculations were carried out to take into account the increased resistance of the walls to a lateral pressure due to the beneficial weight of the floors above. The calculations showed that the walls lower down the building were able to withstand a 17kPa pressure, relying on arching. The principle of arching is shown in the image below.

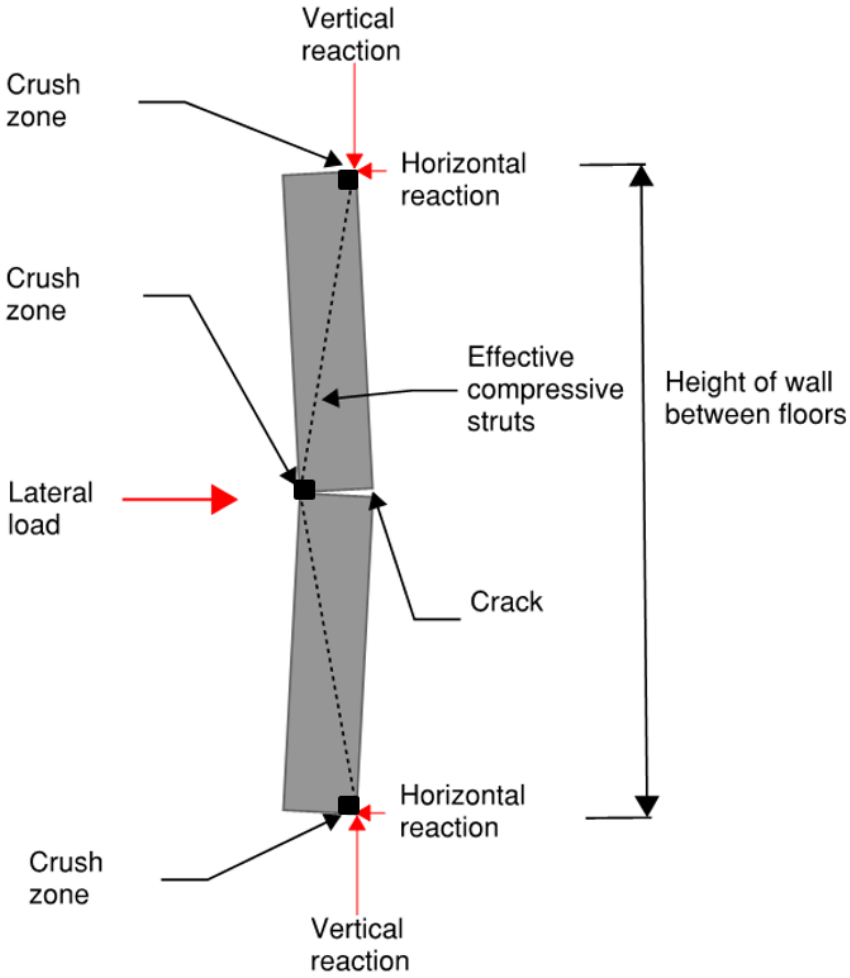

For the upper floors, where the weight from above was insufficient to allow arching, an element removal approach was adopted for the cross walls and flank walls. Since the vertical loadbearing structure has no “redundancy” an alternate vertical load path has been created in the form of steel hanger elements which

connect floors from the 8th floor upwards to a new steel truss on the roof (shown in green in the image below, which shows a diagrammatic vertical cross section through the building). In the event of failure of a wall from the 8th floor upwards, the floors above can hang off the roof truss. Loss of a wall due to a blast is very sudden so, as previously described, a dynamic amplification factor of 2 has been applied to loads of due to walls hanging off the truss due to sudden wall loss.

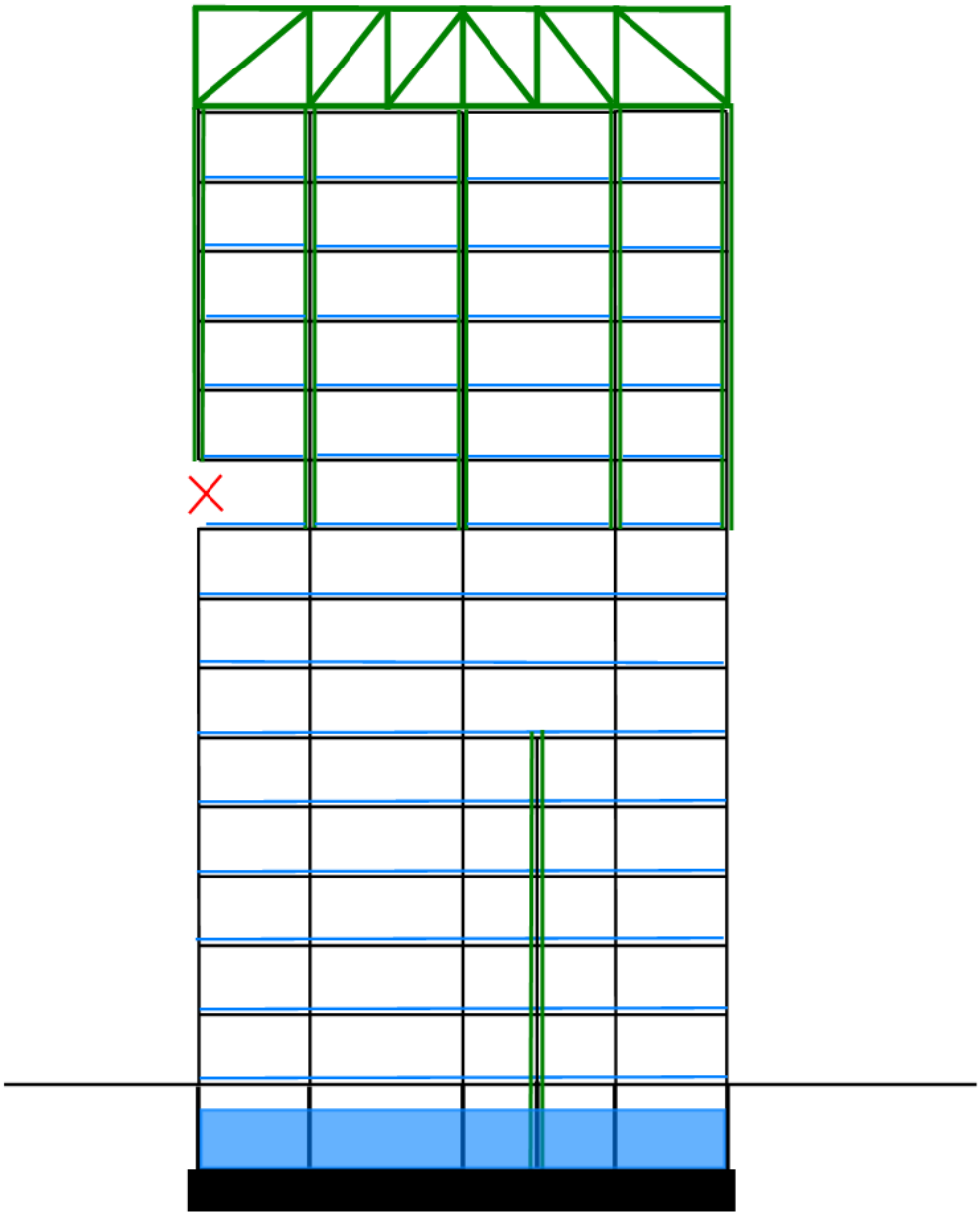

The cross walls separating the 1 and 3 bedroom flats (Floors G to 4) are not able to withstand 17 kPa by arching as they have no load from the floors above. As such it is proposed to install steel columns and beams designed to act as key elements to withstand 17 kPa to create an alternate load paths in the event of loss of this cross wall (see image below).

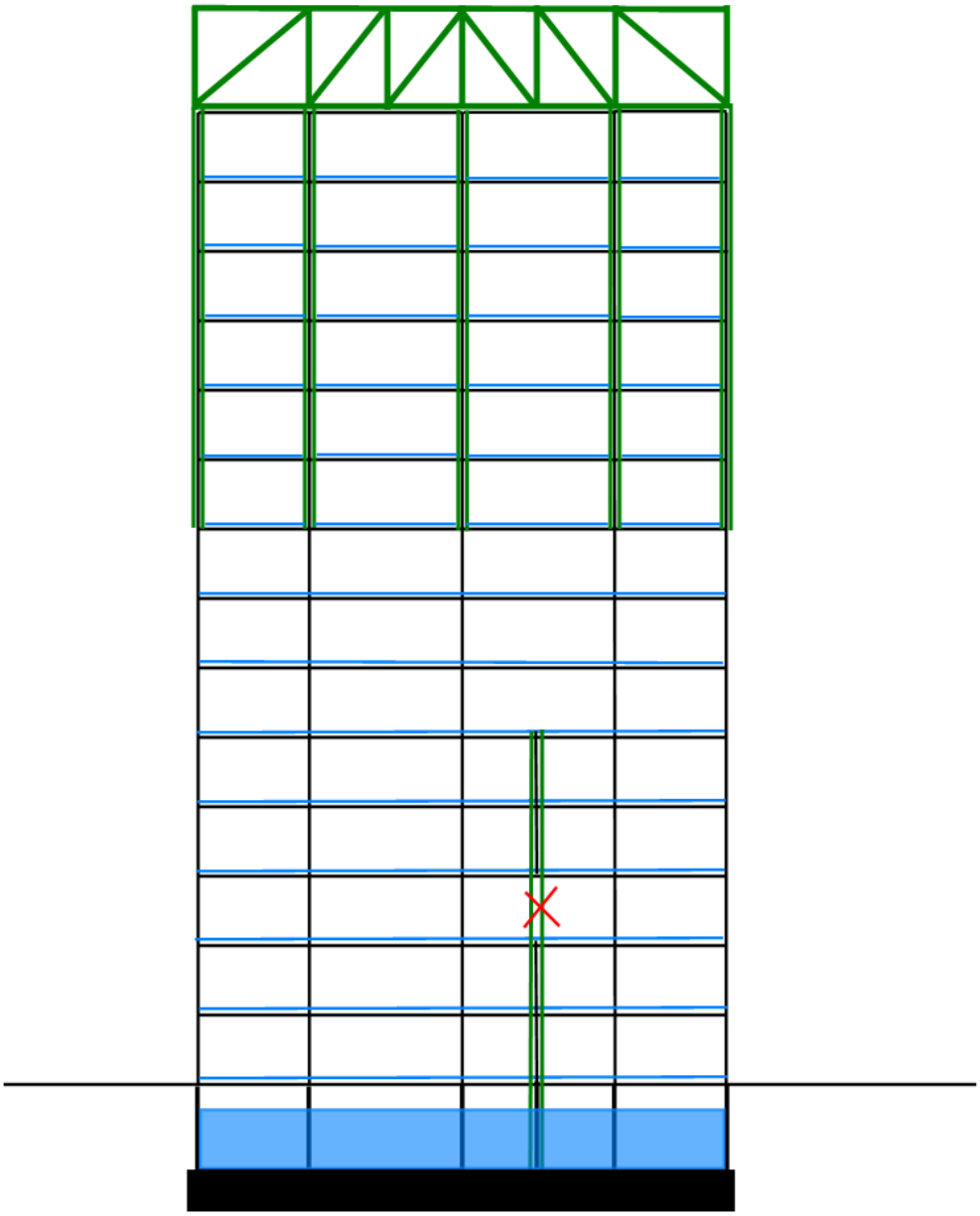

Floors

It is important to ensure that the building can still stand up following the removal of a *floor*; this is not specifically required in Approved Document A of the Building Regulations, but it would be required to meet the overall performance requirement of the Regulations as discussed below.

The floors in Ledbury not only support themselves and their loads but also provide buckling restraint to the flank walls, cross walls and to the main shear wall. A possible accidental event such as the explosion of a gas canister would cause one or more floor panels to fail. Failure of a single floor could cause ‘pancaking’ whereby the failed panel falls onto the floor below, putting additional weight onto that floor leading to disproportionate collapse as seen at Ronan Point.

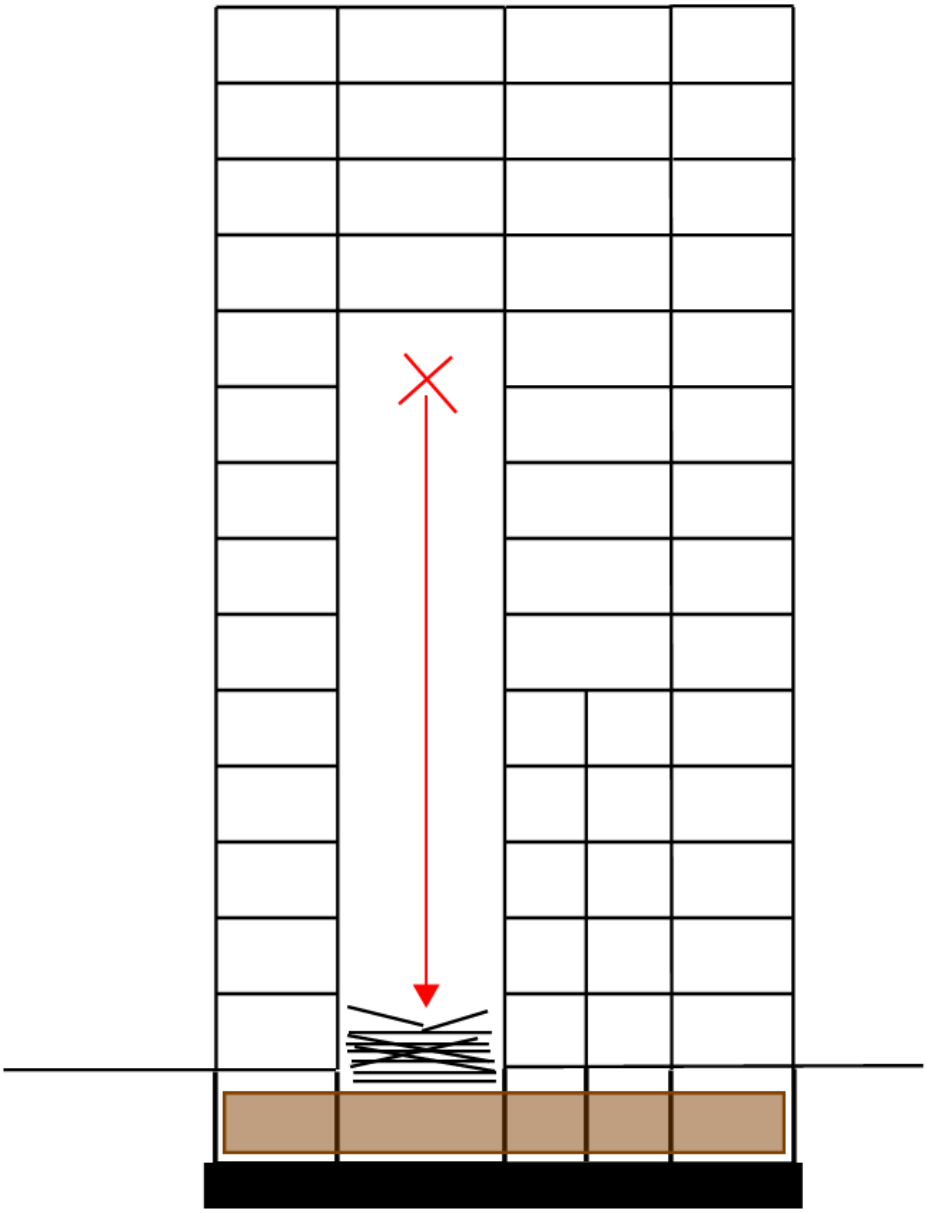

Further the loss of floors could also lead to the disproportionate collapse of the structural walls as the loss of horizontal restraint would mean that the walls would buckle. Hence the floors cannot be allowed to fail.

Therefore, it is proposed to strengthen the floors to withstand 17 kPa. Strengthening the floors also usefully means that they would be able to provide lateral restraint to the flank walls in the event of an internal pressure of 17 kPa being applied to the flank walls.

Shear wall

Since there is only one shear wall in the narrow direction for lateral stability, it needs to be designed as a key element (i.e. to resist 17kPa) by "jacketing" (wrapping) it in reinforced concrete.

5.1.2 Resistance against wind loading

Since the anchorage of the shear wall reinforcement into the foundation is unknown (and likely to be deficient since the wind loads the building was designed for are known to have been too low) and the workmanship of the connections in the shear wall at every joint at floor level is unknown (but known to be vulnerable to poor site workmanship; sand was found in one of the wall to wall connections), it is proposed to include enough steel reinforcement for modern wind loading within the new jacketing.

In addition, since it has not been possible to gain sufficient confidence in the capacity of the existing raft foundation or the anchorage of the main shear wall reinforcement into the raft (and again since these are likely to be deficient since the wind loads the building was designed for are known to have been too low), it is proposed to cast a new raft foundation over the existing raft.

5.1.3 Assumptions

In developing the proposed strengthening concept, the following assumptions have been made:

- That pressure due to a bottled gas explosion is 17 kPa acting on a single panel as recommended in the 2012 BRE/DCLG handbook;
- That the findings at Bromyard House are representative of the other blocks on the estate. This includes layout, panel reinforcement, hollowcores, connections between panels, concrete strength, concrete condition and foundations;
- That the ground conditions at the site are similar to standard soil conditions in this part of London;
- That non-loadbearing partitions (such as the wall between kitchen and living room) will be removed and replaced with lightweight partitions in order to reduce the load on the floors;
- The top floor may need more steel work than typical floors to allow for interfacing between the steel hanger elements on the top floor and the steel truss.
- The ground floor may have lower headroom than typical floors since bracing requirements during construction may dictate floor thickness.
- That the outer leaves of façade panels and the flank wall panels will be removed and replaced with a lightweight façade (as this is required to enable the strengthening scheme).
- That piped gas will not be turned back on.

5.2 Description of the proposed strengthening measures

The following images show the various strengthening measures required:

Floors 13 to 8:

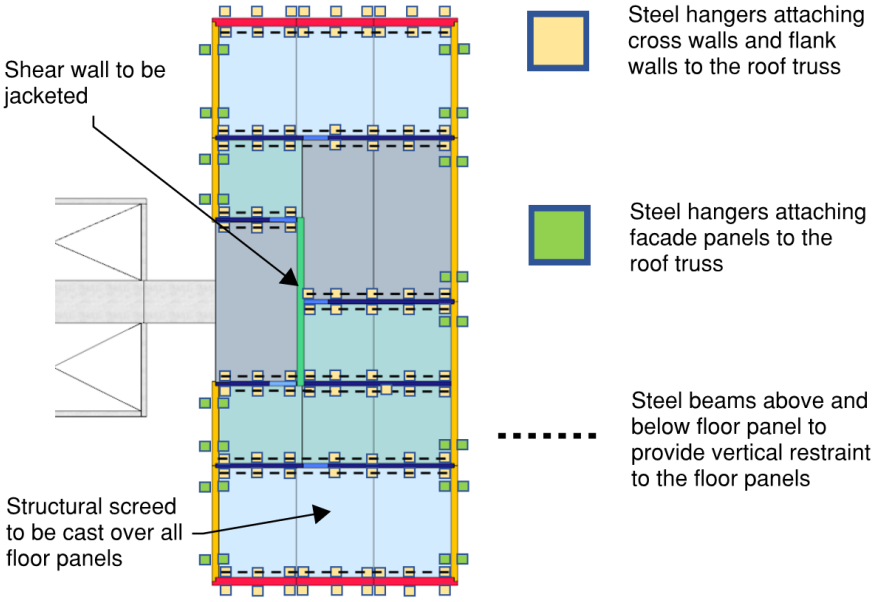

Floors 7 to 5:

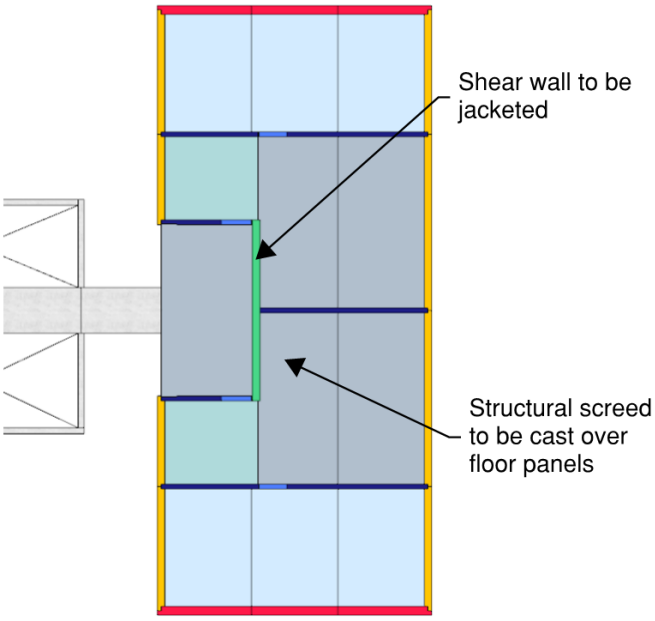

Floors 4 to G:

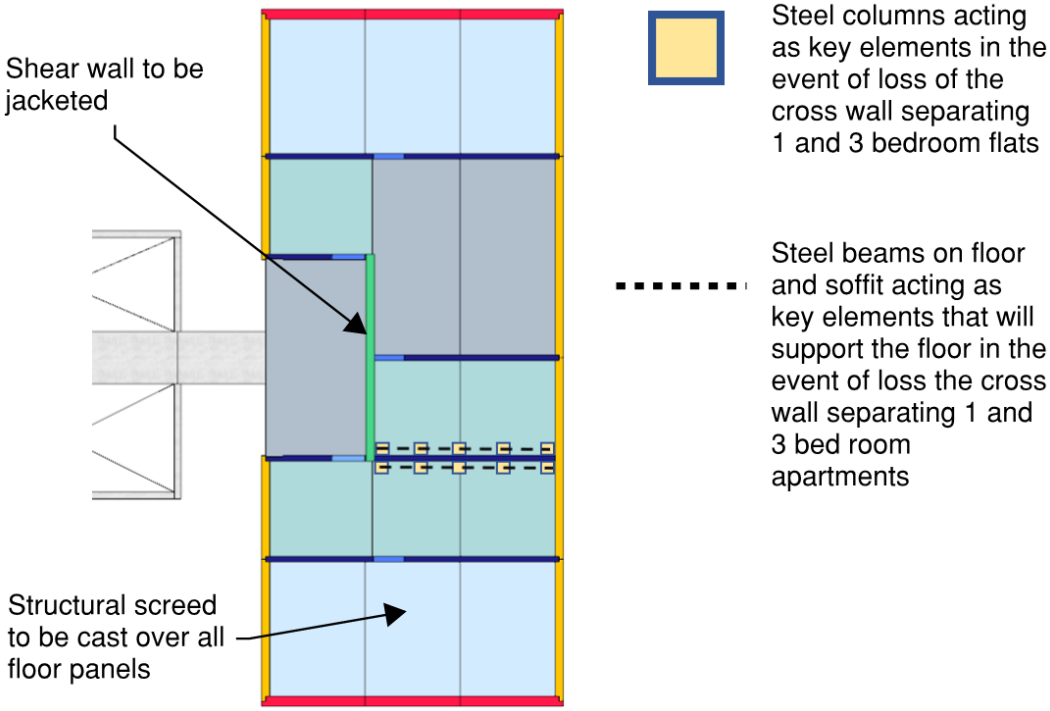

Isometric view of truss at roof level

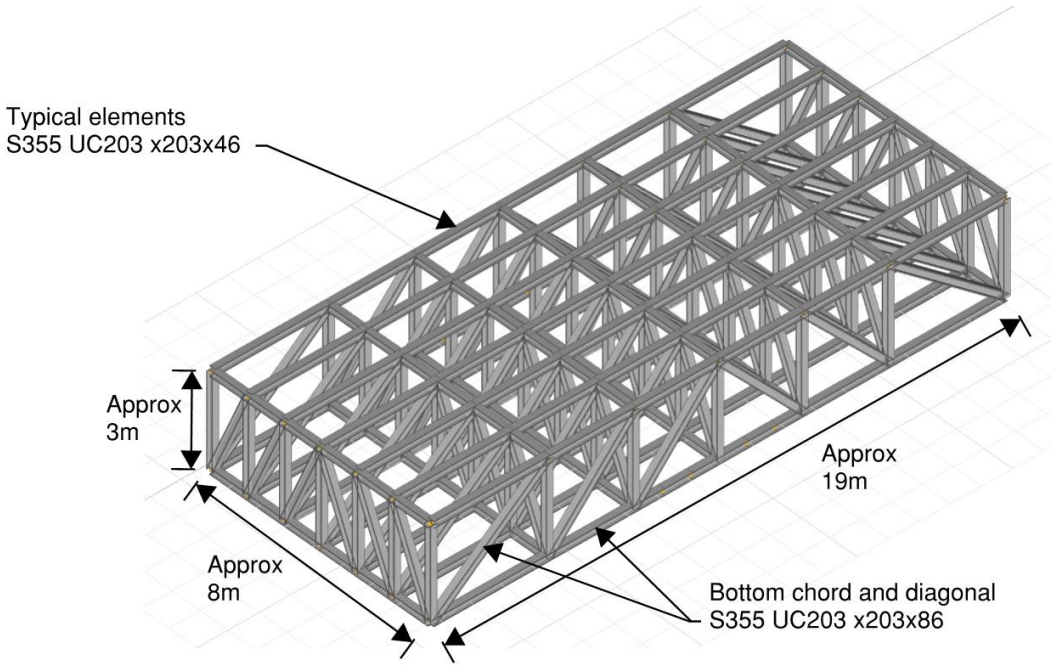

Elevation view of strengthening measures:

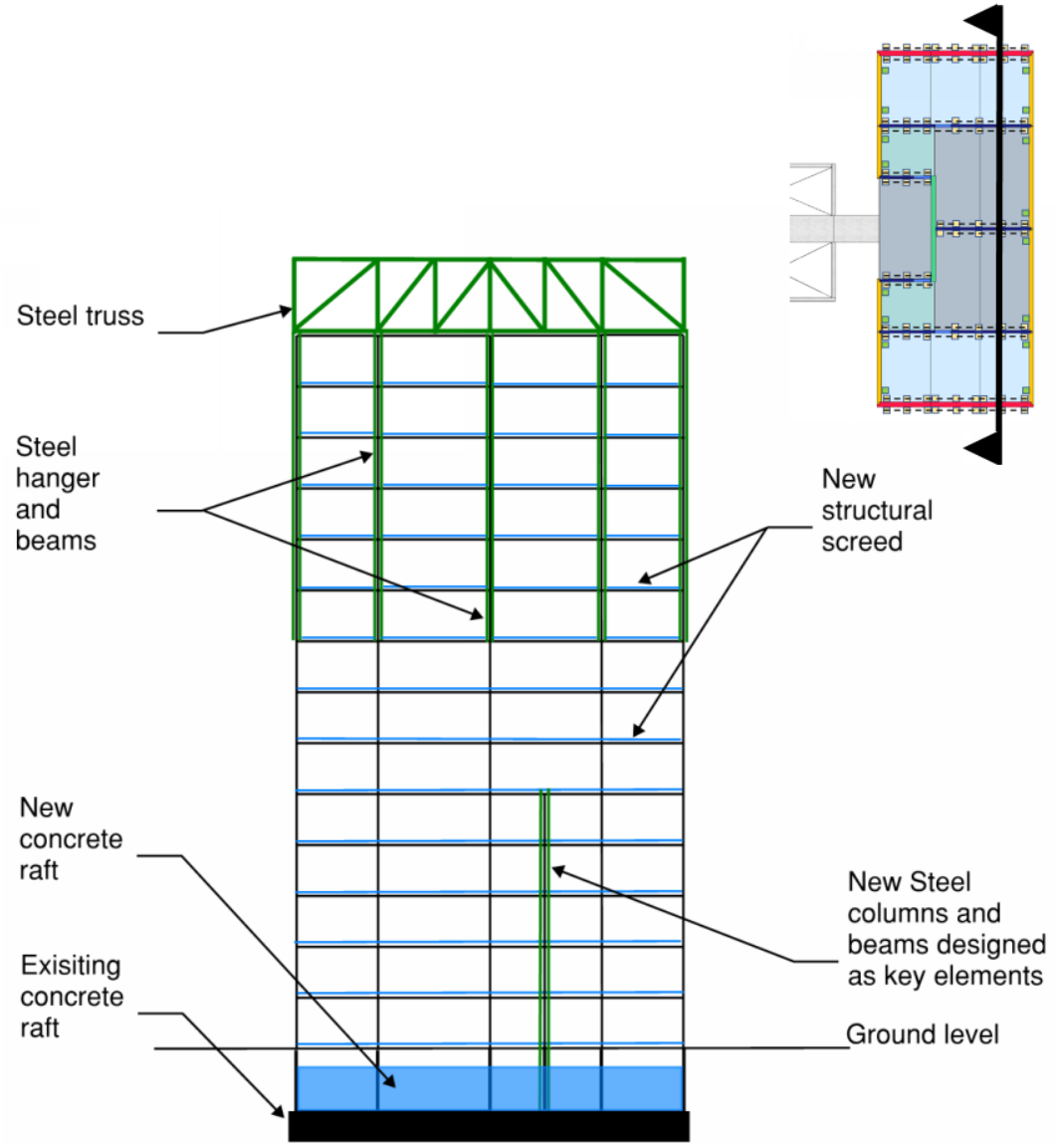

5.2.1 Details of strengthening measures

1. Typical Cross walls (floors 8 and above) – Add steel hangers

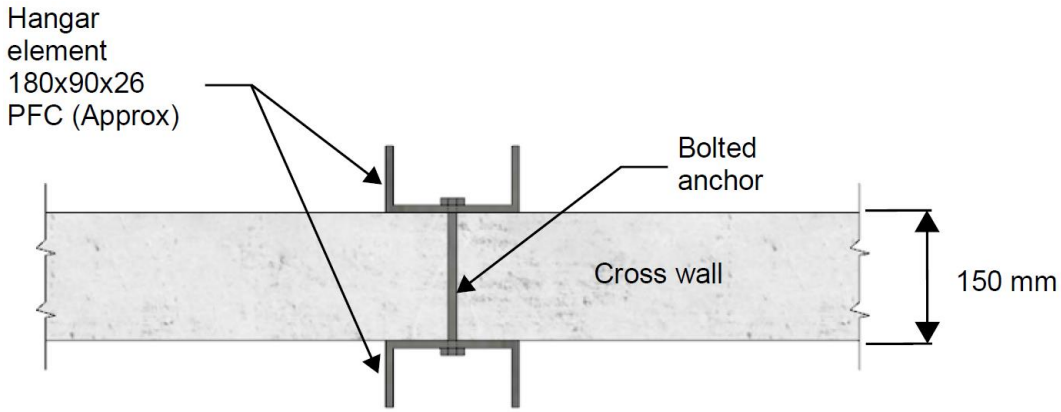

2. Typical Flank walls (floors 8 and above) – Add steel hangers

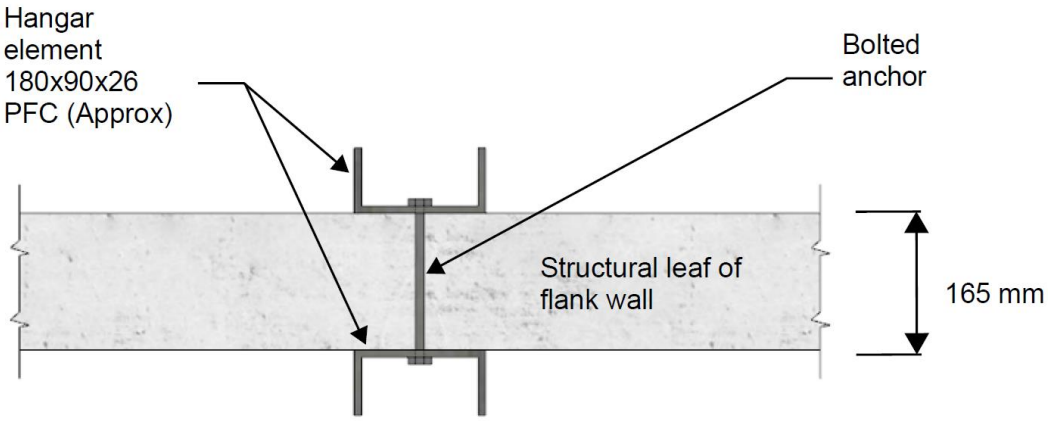

3. Typical façade panels (floors 8 and above) – Add steel hangers

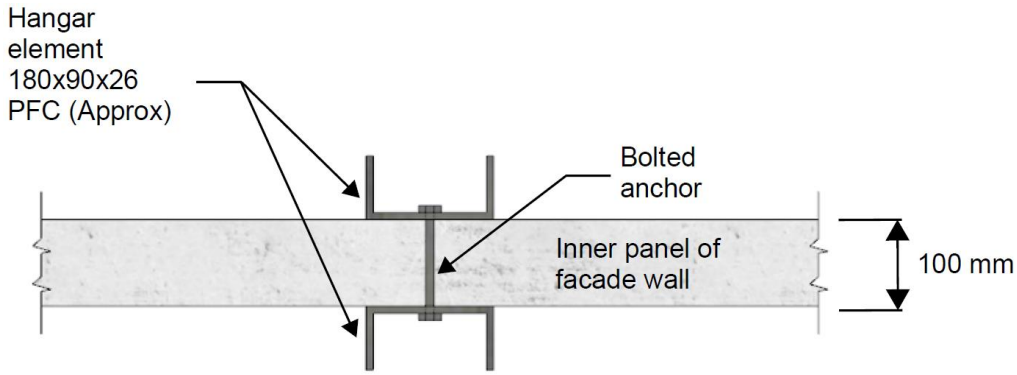

4. Cross wall/floor/cross wall junction (floors 8 and above)

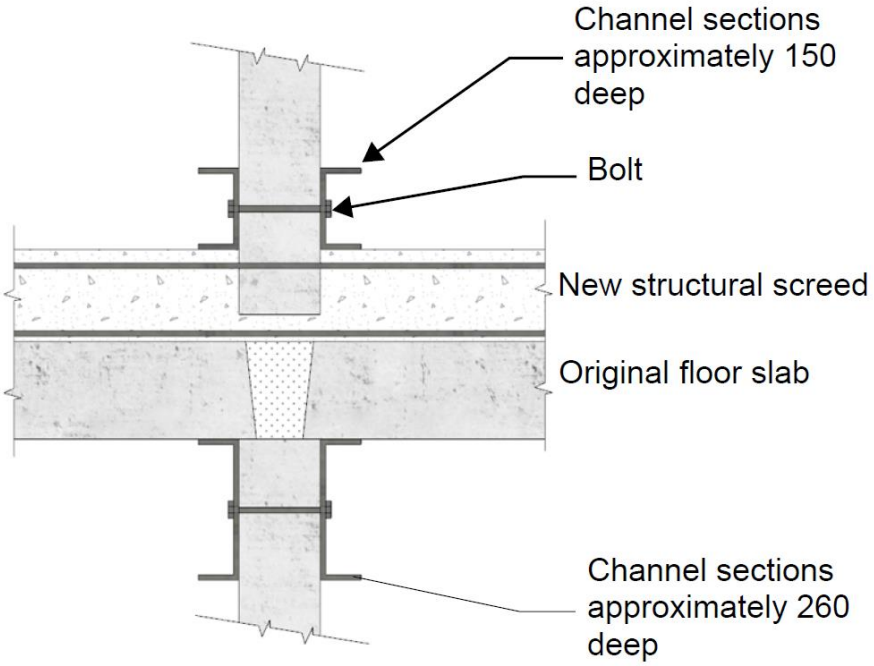

5. Flank wall/floor/flank wall junction (floors 8 and above)

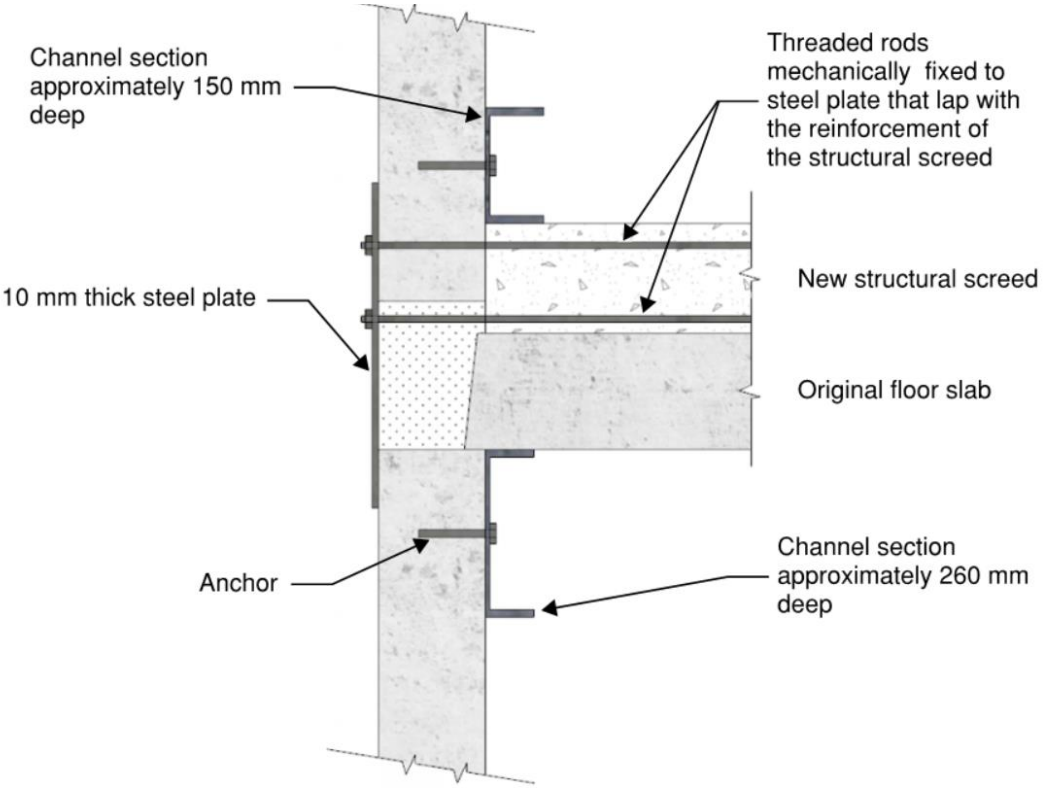

6. Typical flank wall to floor joint walls (Floors G to 7) – Add mechanical connections to connect flank wall back to floor diaphragm.

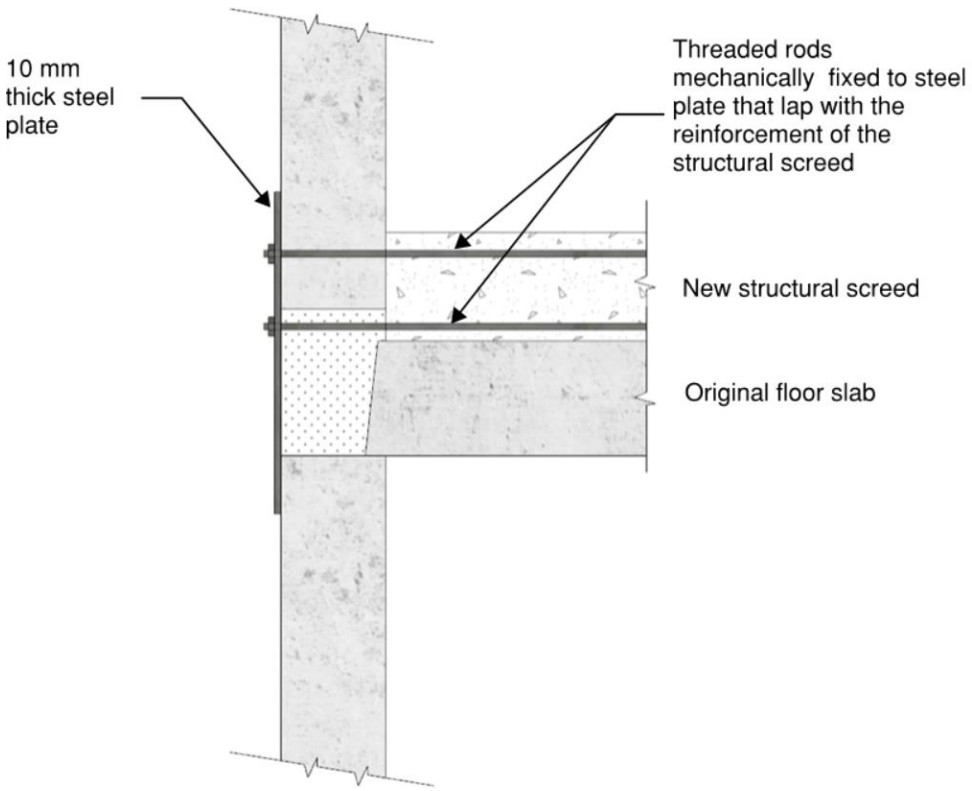

7. Cross walls separating 1 and 3 bedroom flats (Floors G to 4) – Add steel columns.

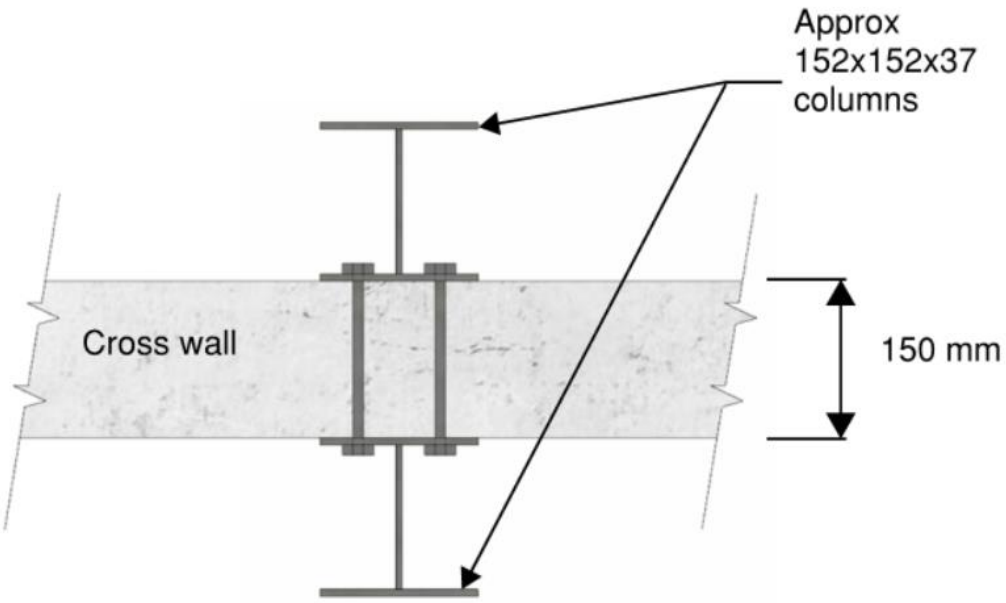

8. Cross wall/floor cross wall junction cross walls separating 1 and 3 bedroom flats (Floors G to 4) – Add steel beams.

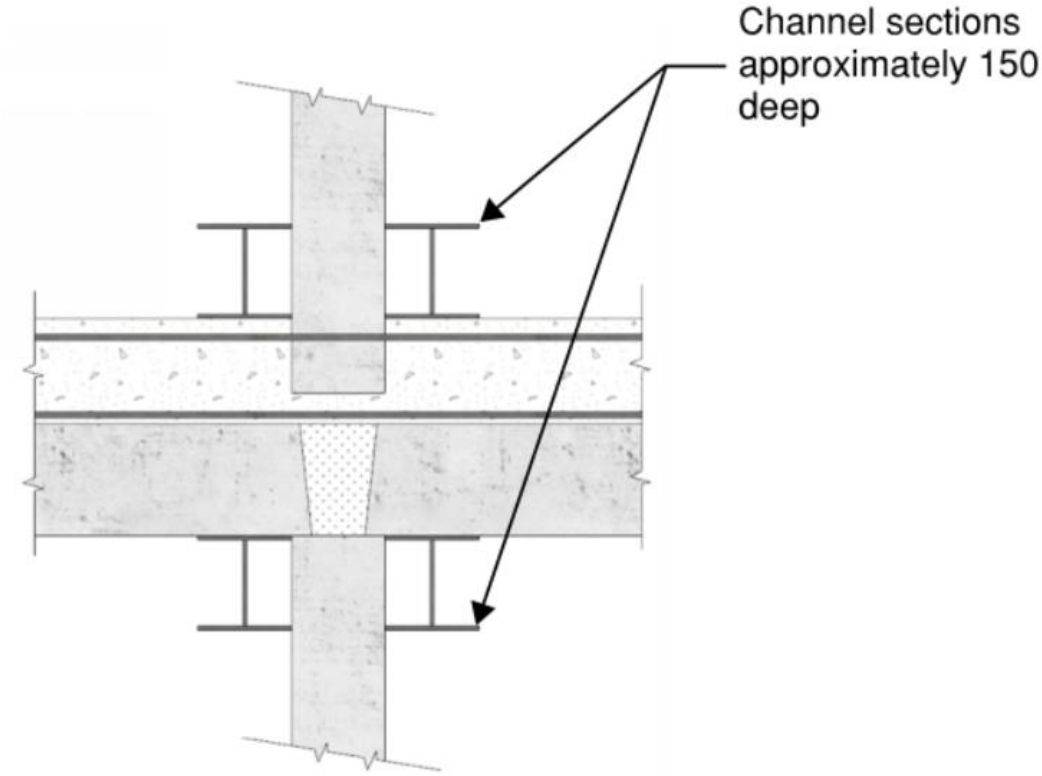

9. Shear wall - Add jacketing.

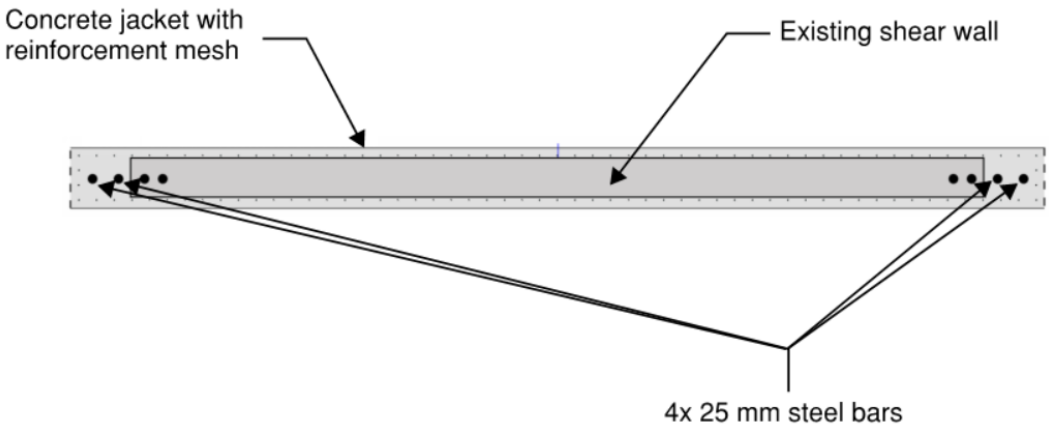

10. All floors – The screed should be removed and a new thicker reinforced screed should be cast.

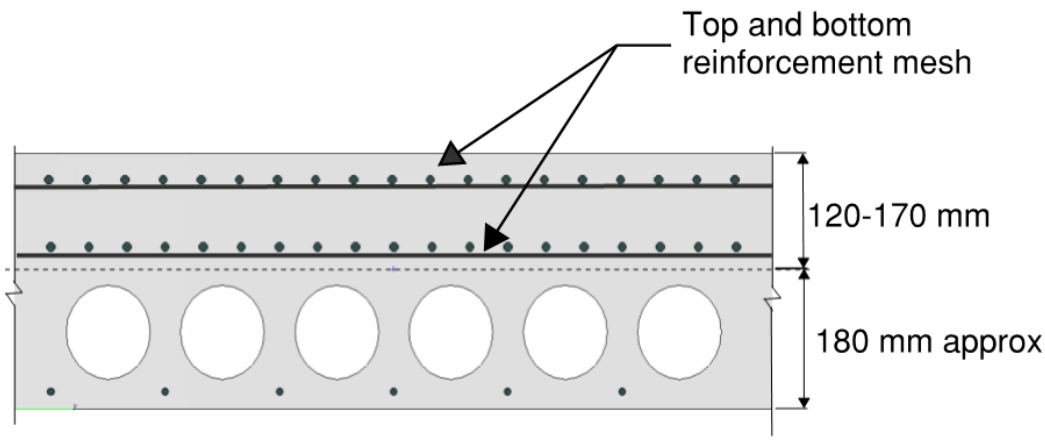

5.3 Additional information for costing purposes

There are several specific construction challenges to constructing the proposed strengthening for which suitable cost allowance needs to be made:

- The construction of the roof truss requires working at height. Whilst parts of the truss can be assembled at ground level and craned up to the roof, some connections will need to be made at height.
- The roof truss is likely to require welding on site to connect the vertical tension ties to the roof truss.
- Since the tension ties and beams have to be installed inside the building they will need to be made in short enough pieces to be brought into the building via the front door and lift core or through the window, and then spliced together. For example, it is envisaged that hangers and columns would be delivered in 1.2m pieces and spliced at mid-storey height.
- Allowance for a suitable crane to get heavy items up to the roof.

5.3.1 Indicative construction sequence

Because the building currently has little or no resistance to disproportionate collapse and because the floors are very weak, the works need to be carefully sequenced for safety reasons, including temporary propping. The following indicative sequence is envisaged which should be read in conjunction with the sketches below:

1. Remove non-loadbearing façade panels at ground level.
2. Brace all structural walls at ground level with steelwork grillage.
3. Demolish the ground floor slab.
4. Remove fill beneath ground floor.

5. Cast new raft, with raised plinths for shear wall and columns on wall line separating 1 and 3 bedroom flats.
6. Prop floors all the way to the roof.
7. Strengthen roof and install new roof truss

Starting from the top floor:

8. Remove the outer leaves of the flank wall panels.
9. Remove existing floor screed.
10. Cast the new floor slab along with external steel channel fixed to outside face of flank walls.
11. Install steel hanger and beam elements:
    a. Carefully cut out holes in the slabs in floor above where steel hangers need to go through to floor above.
    b. Install steel hangers and anchor them to the wall panels.
    c. Install horizontal steels beams above and below floor slabs.
    d. Infill holes previously cut for the steels in the floor.

Work downwards to ground floor.

12. Install shear wall jacketing

Steps 1,2,3 & 4

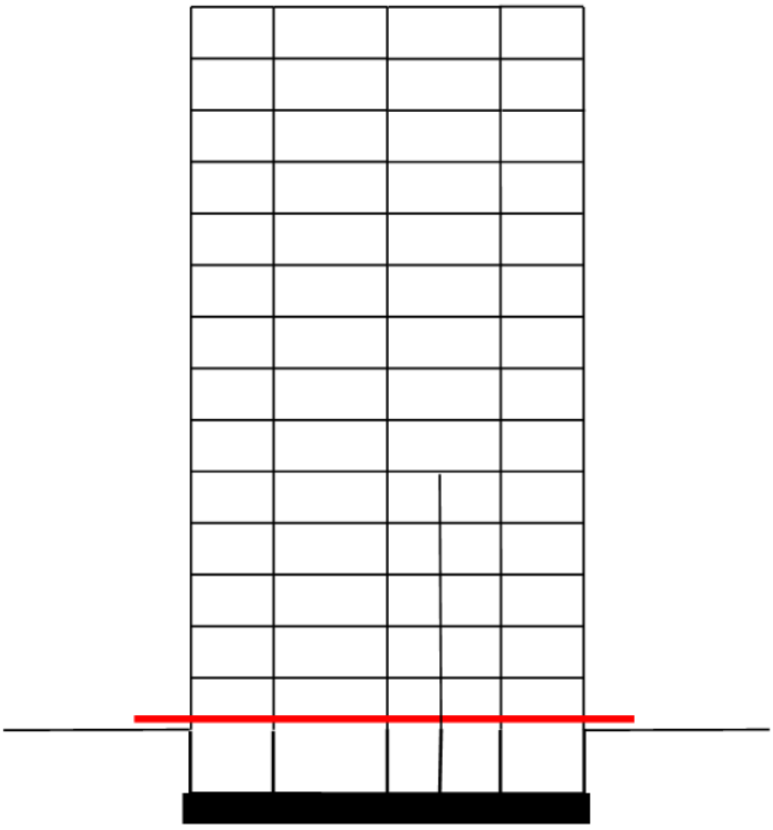

Step 5

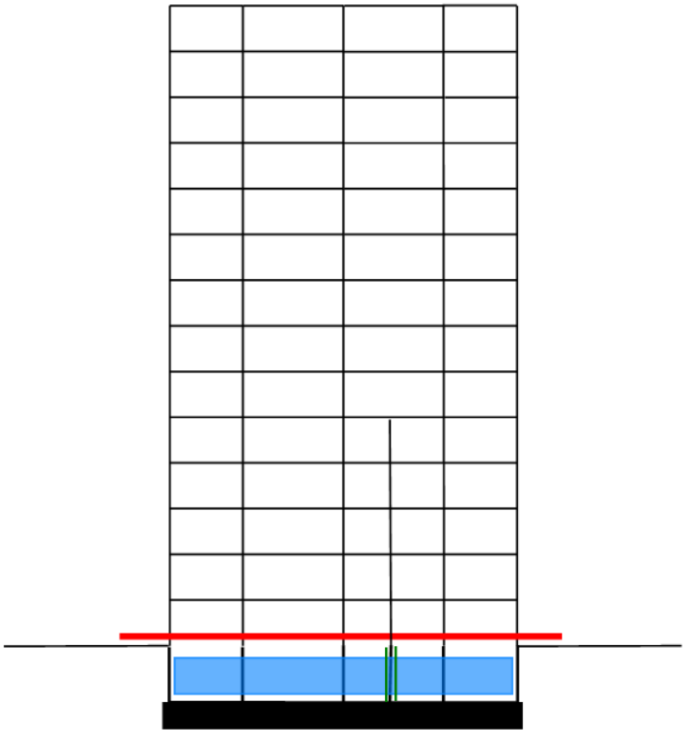

Step 6

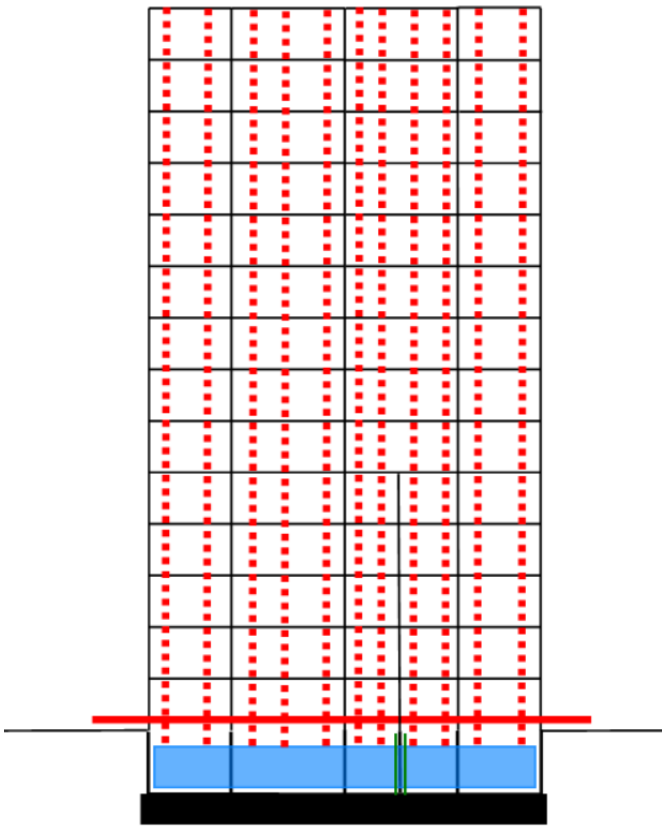

Step 7

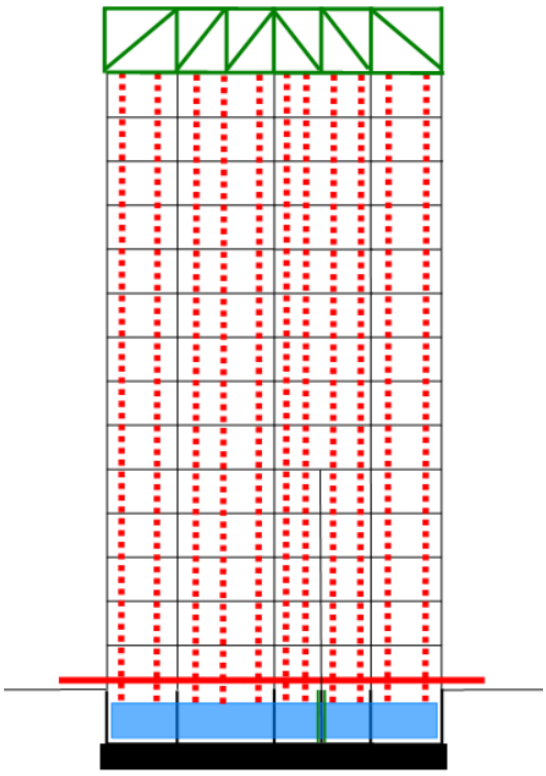

Steps 8,9,10 & 11

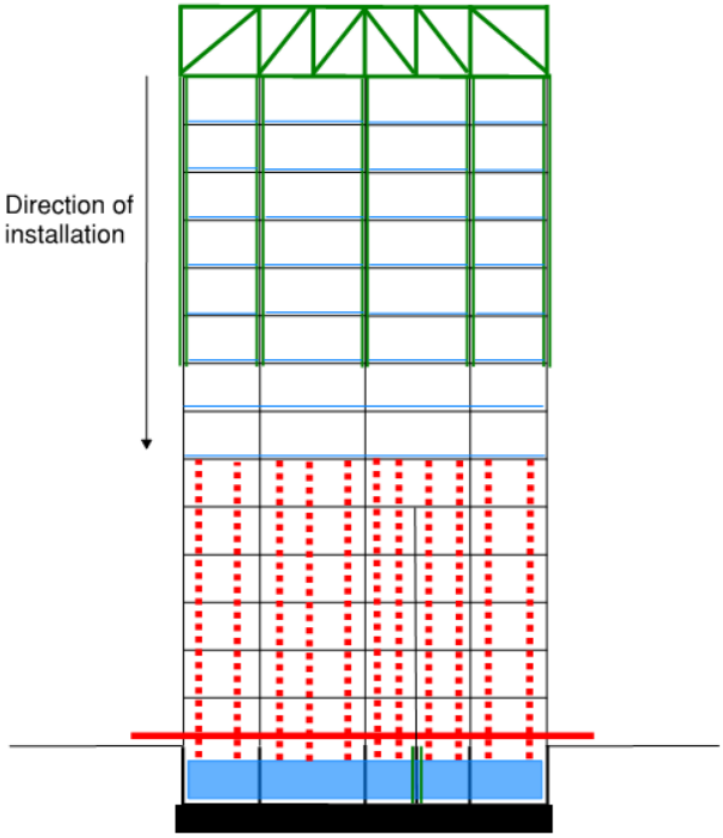

5.3.2 Removal of outer leaf (and polystyrene) from panels

The outer leaf needs to be removed to enable the strengthening works. In addition, it is understood that the Council may wish to remove the polystyrene (used for insulation) sandwiched within the façade and flank wall panels. The steps that would need to be undertaken to do this would be:

1. Carry out a trial investigation of flank wall panel and each type of façade wall panel at ground floor level. This would involve:
    a. Diagonal propping of the panels to ensure that the outer leaves do not collapse outwards during the investigations.
    b. Ferro-scanning of the panels to locate the tie connections between the inner and outer leaves.
    c. Intrusive breakouts to confirm tie positions and character of the ties.
    d. Once the above steps are complete a trial removal of external leaf and polystyrene can be carried out.
2. Based on the information from step 1, a safe methodology and scaffolding design should be developed for the removal of the outer concrete leaves and polystyrene filling throughout the full height of the building. The

scaffolding design should allow for heavier loads than normal since it will have to support rubble from the removed outer leaves.

5.3.3 Residual safety risks

This section is to assist a contractor in developing a safe method of works.

This should be read in conjunction with 5.3.1 and 5.3 above.

The tower blocks on the Ledbury Estate are vulnerable to disproportionate collapse so great care should be taken during construction to ensure that strengthening measures are installed in a safe and controlled manner.

1. Installing the truss on the roof will involve working from height. Adequate safety measures should be taken to ensure that that the risk from all hazards due to working from height are mitigated.
2. Hanger elements and beam steel elements will need to be brought inside the building in order to install them. It is likely that these elements will need to be brought in, in manageable pieces and then welded together and installed onsite. It is assumed that access into the flats for bringing these pieces in would be through a scaffold lift and then through the living room window.
3. Strengthening of the foundation: in casting the new foundation care should be taken to ensure that any pits dug should be adequately shored to ensure safety of personnel.
4. Strengthening of the foundation: all walls should be adequately braced prior to demolition of ground floor slab

5.3.4 Further work required during the next stage

To develop a full detailed design, the following additional investigations will be required:

- A full geotechnical survey to ascertain the soil conditions at the locations of the buildings on Ledbury estate.
- Sand was found in of the joints of the main shear wall. Further investigations would need to be carried out to be certain that this was only a localised effect at the connections between these panels and that sand was not present all along the panel to panel joint.
- Intrusive investigations into the façade panels as discussed in 5.3.2.
- Developing a safe method of bringing heavy construction materials into the building.
- Some connection tests to ensure ductility of anchors used to attach steel elements to the concrete.

5.3.5 Effect on space planning

The strengthening works will affect the space planning as follows:

- Reduced headroom of 70-120 mm in all flats due to floor strengthening.
- Size of all rooms above 7th floor reduced in width by about 200mm to accommodate new hangers.
- Reduction in width of the rooms adjacent to the cross wall separating 1 and 3 bed flats at Ground-4th floor by about 150mm.

In addition, space allowance should be made for any necessary fire protection, as specified by the Council's Fire Engineers.

The effect of the strengthening works on a flat above the 7th floor is demonstrated in the images below.

Existing

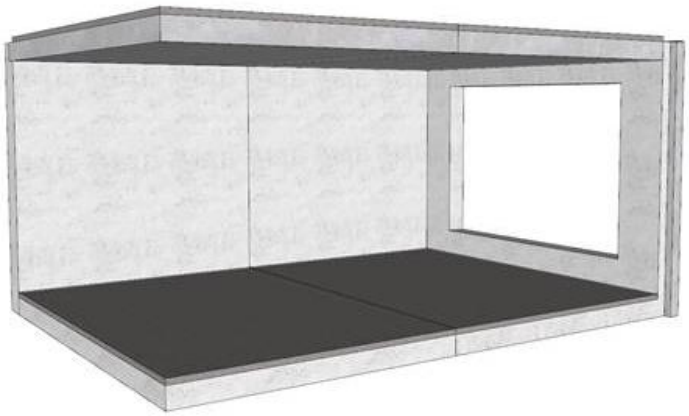

Proposed

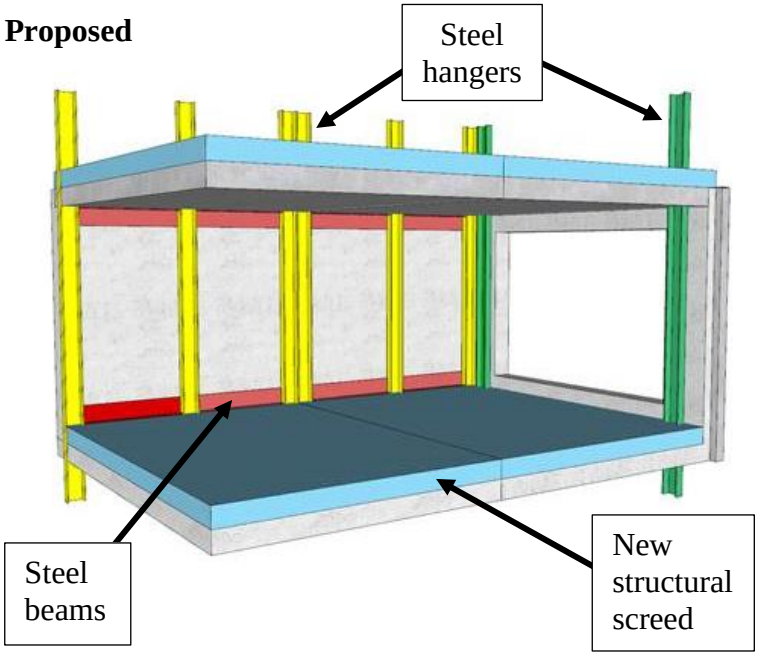

6 Proposed works for the stair core

6.1 Reasoning behind new structure

6.1.1 Resistance against disproportionate collapse

The structure of the stair core has been found to fundamentally lack robustness:

The structure could not sustain the notional removal of a wall panel without disproportionate collapse, as there is no alternative gravity load path for the floor panels, stairs or wall panels above. This is clearest with the stairs which are only supported through bearing on the wall panel corbels. If this wall panel was removed the stairs would fall and would likely cause 'pancaking', as discussed in Section 5.1.1.

The structure has been found to be insufficient to resist a pressure of 17kPa as required for the key element approach. The wall panels have been found to be largely unreinforced and with little lateral restraint to allow arching. This is clearest with the outer wall panels supporting the stairs which are only restrained laterally by the walls at each side. In addition, the stairs have been found to have insufficient reinforcement to support 17kPa.

It is considered particularly important to provide a robust solution for the structure of the stair core as this forms the only evacuation route for the residential towers. It is therefore proposed that a key element approach is preferred over notional element removal as a method of assessment.

6.1.2 Difficulties of strengthening

It is not considered feasible to strengthen the wall panels to provide adequate resistance to disproportionate collapse due to the lack of reinforcement and lateral restraint. It is therefore proposed that a new gravity system is provided for both the floor panels and stairs that is designed to be robust against disproportionate collapse. It is proposed that the new gravity system is designed to resist all load cases including wind.

It is unlikely that the installation of a new structural system will be viable without removal of the existing stair core structure due to the complexity of construction and the impact on the internal space. It is therefore proposed that a new stair core is constructed that is not limited by the current configuration.

Additional information and further consideration of the following would be required to develop the structural scheme:

- Internal dimensions required to comply with all parts of the Building Regulations.
- Investigation of the existing foundations and assessment to determine whether these can be used to support the new structure.
- Requirements for the cladding that may affect the loading.

- Structural support required for the lifts.

6.2 Proposed new core structure

For the reasons discussed in Section 6.1.2, it is proposed that the existing stair (and lift) core (including the link bridges) is demolished and replaced with a completely new stair (and lift) core. The demolition can be undertaken without affecting the structure of the residential towers as they are completely independent structures.

The new stair core will need to have adequate resistance to both disproportionate collapse and wind. A number of structural solutions could be considered but the choice of structure (most likely steel frame) is not expected to have a significant impact on the total construction cost, as the cost will depend more on non-structural requirements. It is therefore recommended that a typical cost allowance is made based on plan area and external wall area. The development of the final scheme will need to consider all requirements in the Building Regulations which extends beyond the scope of this report.